Project 1
Precast Prestressed Beam
Assignment 3

CEE 530
Prestressed Concrete
Due 3/2/2026

Group 3

Hailey Crosson
Reyaneh Kazemian
Leohuns Robert Kambu
Prince Aminu
Chidchanok Pleesudjai (Fen)
Haribhushan Sirigineedi

Problem Statement :
Check ultimate strength of section

Given
Material Properties and Allowable Stresses
$f'_c = 6$ ksi, $f'_{ci} = 4.8$ ksi, $f_{pu} = 270$ ksi
Allowable stresses at transfer considering no losses:
$f_c = 0.6\ f'_{ci}$
$f_t = 3\sqrt{(f'_{ci})}$
Allowable stresses at service considering losses:
$f_c = 0.6\ f'_c$
$f_t = 3\sqrt{(f'_c)}$

Section Properties

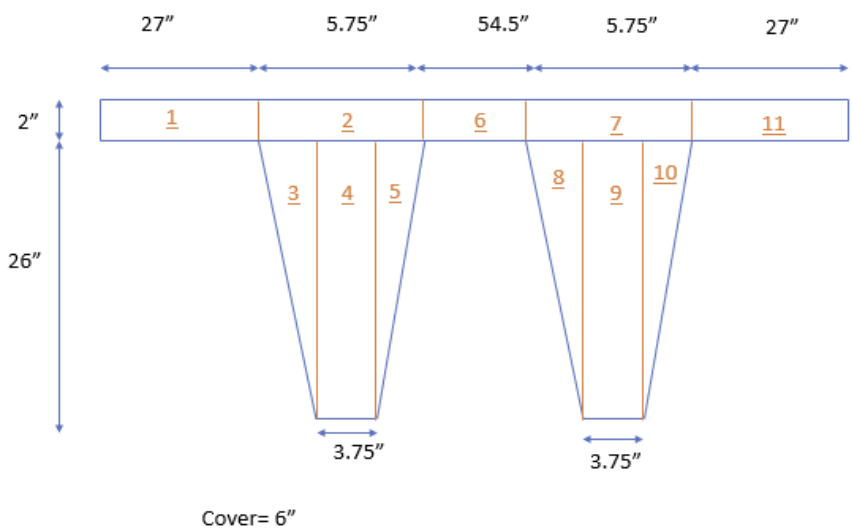

Figure 1. Section dimension

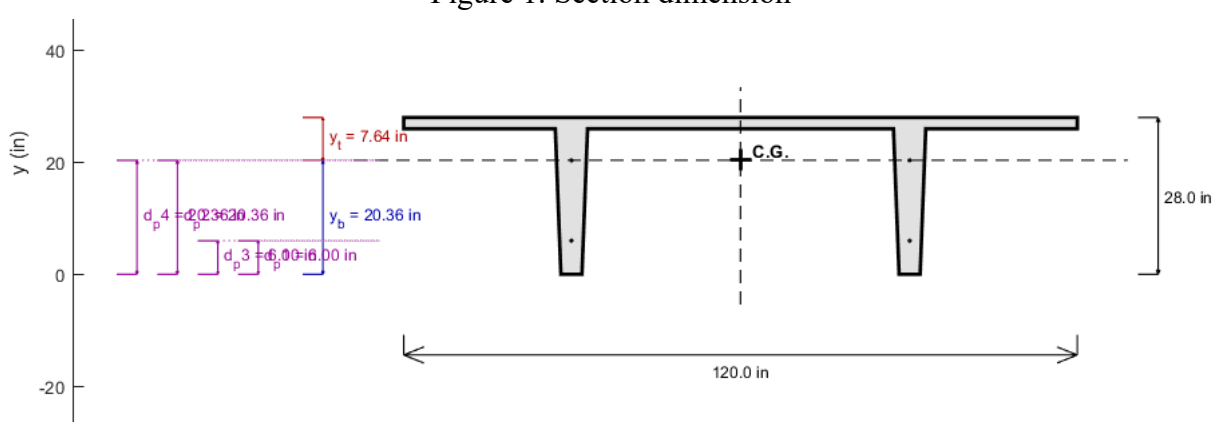

Figure 2. Section dimension at the support

Calculating Stresses (From Project 1-Part 1)

Eccentricity

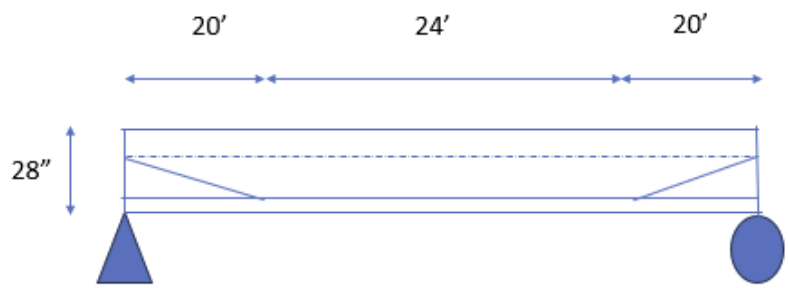

Equation for the eccentricity of draped cable from 0 to 20 ft: $e_1 = (14.36/20)x$
@ 0 ft: $e_1 = 0$ in, $e_2 = 14.36$ in
@ 10 ft: $e_1 = 7.18$ in, $e_2 = 14.36$ in
@ 20 ft: $e_1 = 14.36$ in, $e_2 = 14.36$ in
@ 32 ft (midspan): $e_1 = 14.36$ in, $e_2 = 14.36$ in

Moment Due to Self Weight and Live Load
Concrete unit weight = 150 lb/ft³ = 0.0868 lb/in³
Unit dead load (self-weight) = 0.0868 lb/in³ × 487 in² = 42.27 lb/in = 507.26 lb/ft
Sustained dead load (2″ concrete topping) = 0.0868 × 2 × 120 = 20.83 lb/in = 249.98 lb/ft
Unit live load = 420 lb/ft = 35 lb/in
Moment equation: $M(x) = 0.5wLx - 0.5wx^2$

Material Properties and Allowable Stresses
$f'_c = 6$ ksi, $f'_{ci} = 4.8$ ksi, $f_{pu} = 270$ ksi

Allowable stresses at transfer
$f_c = 0.6\, f'_{ci} = 0.6 \times 4.8 = -2.88$ ksi (−2,880 psi)
$f_t = 3\sqrt{(f'_{ci})} = 3\sqrt{4800} = +207.85$ psi (+0.208 ksi)

Allowable stresses at service
$f_c = 0.6\, f'_c = 0.6 \times 6 = -3.6$ ksi (−3,600 psi)
$f_t = 3\sqrt{(f'_c)} = 3\sqrt{6000} = +232.38$ psi (+0.232 ksi)

<u>Moment Capacity at Midspan</u>
Section properties
$y_t = 7.64$ in

$y_b = 20.36$ in

$I = 34638.82$ in⁴

Top $s_t = \frac{I}{y_t} = 4533.88\ in^3$

Bot $s_b = \frac{I}{y_b} = 1701.32\ in^3$

Unit dead load, W_D = 0.0868 lb/in³ * 487in² = 42.27 lb/in = 507.26 lb/ft

Sustained 2" concrete topping W_{SD} = 0.0868 x 2 x 120 =20.832 lb/in = 249.98 lb/ft

Unit live load W_L = 420 lb/ft = 35 lb/in

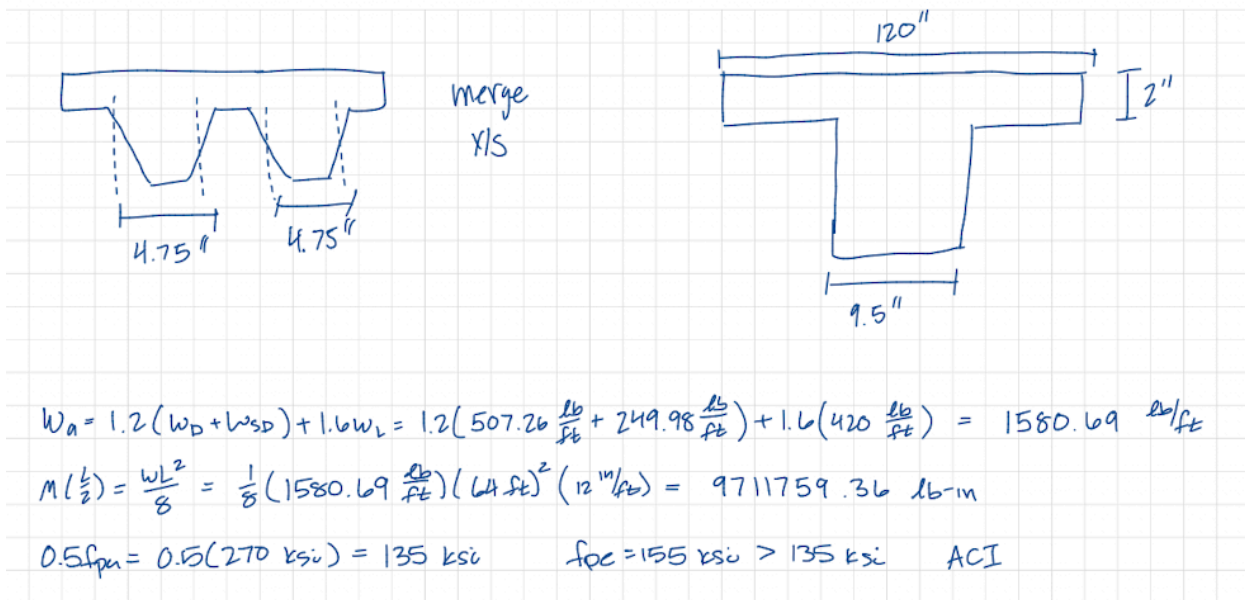

M_u = 9711.45 k.in

Assume strands: 13 - ½" A_p = 1.99 in²

Effective depth: Strand dp = 22"

<u>Bonded Case</u>

$f_{ps} = f_{pu}\ \{1 - \frac{\gamma p}{\beta_1}\ [\rho_\rho \frac{fpu}{f'c} + \frac{d}{d_p} * \frac{fy}{f'c}(\rho - \rho')]\}$

$f_{py}/f_{pu} = \frac{229500}{270000}$ = 0.85 γ_p = 0.4

$\rho_\rho = \frac{1.99}{120\ x\ 22}$ = 0.000754

β_1= 0.85 - 0.05($f'c$ - 4ksi) (for $f'c$ > 4 ksi)

β_1 = 0.85 - 0.05 (6 - 4) = 0.75

Since no Steel reinforcement provided

$f_{ps} = f_{pu}\ \{1 - \frac{\gamma p}{\beta_1}\ [\rho_\rho \frac{fpu}{f'c}]\}$

$f_{ps} = 270\ (1 - \frac{0.4}{0.75}(0.000754 \times \frac{270}{6}))$

$f_{ps} = 265.11$ ksi

$f_{ps} \times A_p = 0.85f'_c \times b \times a$

$a = \frac{265.11\ x\ 1.99}{0.85\ x\ 6\ x\ 120} = 0.862$ in”

The compression block is in the flange.

Depth to neutral axis, C = 0.862/0.75

C = 1.15”

$M_n = 1.99 \times 265.11 \times (22-0.862/2)$

$M_n = 11279.13$ k.in

Strain in prestressing (excluding strain from prestress and concrete before loading)

$= 0.003 \times \frac{22-1.15}{1.15}$

= 0.0544 > 0.005

Use $\vartheta = 0.9$

$\vartheta M_n = 0.9 \times 11279.13$

= 10151.22 k.in > M_u (9711.45 k.in)

Section satisfied.